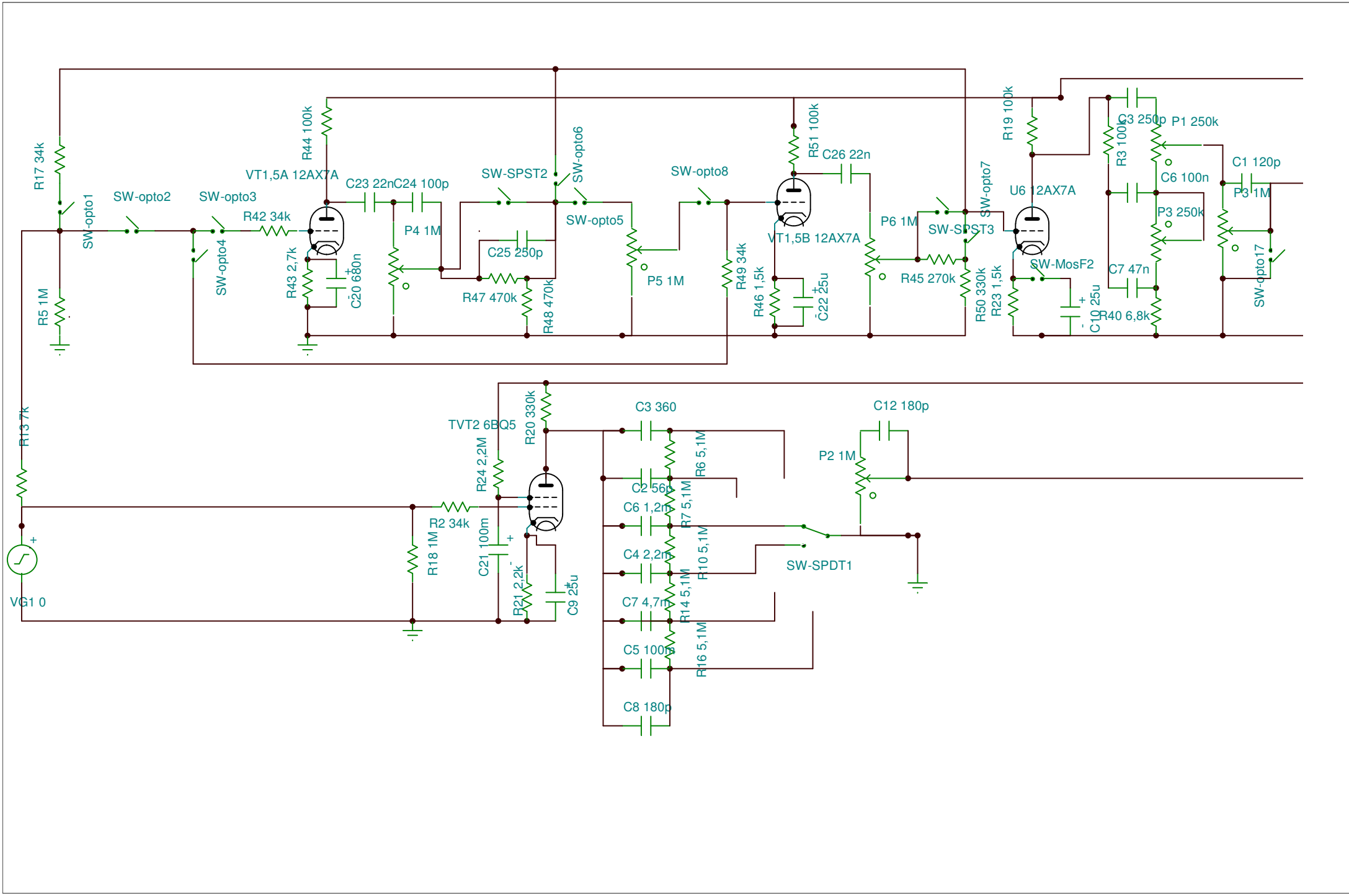
R17 34k
R5 1M
SW-opto1
SW-opto2
SW-opto3
SW-opto4
R42 34k
R44 100k
VT1,5A 12AX7A
R43 2,7k
C20 680n
C23 22n
C24 100p
P4 1M
SW-SPST2
SW-opto6
C25 250p
R47 470k
R48 470k
SW-opto5
P5 1M
SW-opto8
R49 34k
R51 100k
C26 22n
VT1,5B 12AX7A
R46 1,5k
C22 25u
P6 1M
R45 270k
SW-opto7
SW-SPST3
R50 330k
R23 1,5k
R19 100k
U6 12AX7A
SW-MosF2
C10 25u
R40 6,8k
R3 100k
C3 250p
P1 250k
C6 100n
P3 250k
C7 47n
C1 120p
P3 1M
SW-opto17
R13 7k
VG1 0
TVT2 6BQ5
R20 330k
R24 2,2M
R2 34k
R18 1M
C21 100m
R21 2,2k
C9 25u
C3 360
R6 5,1M
C2 56p
R7 5,1M
C6 1,2n
R10 5,1M
C4 2,2n
R14 5,1M
C7 4,7n
R16 5,1M
C5 100n
C8 180p
C12 180p
P2 1M
SW-SPDT1

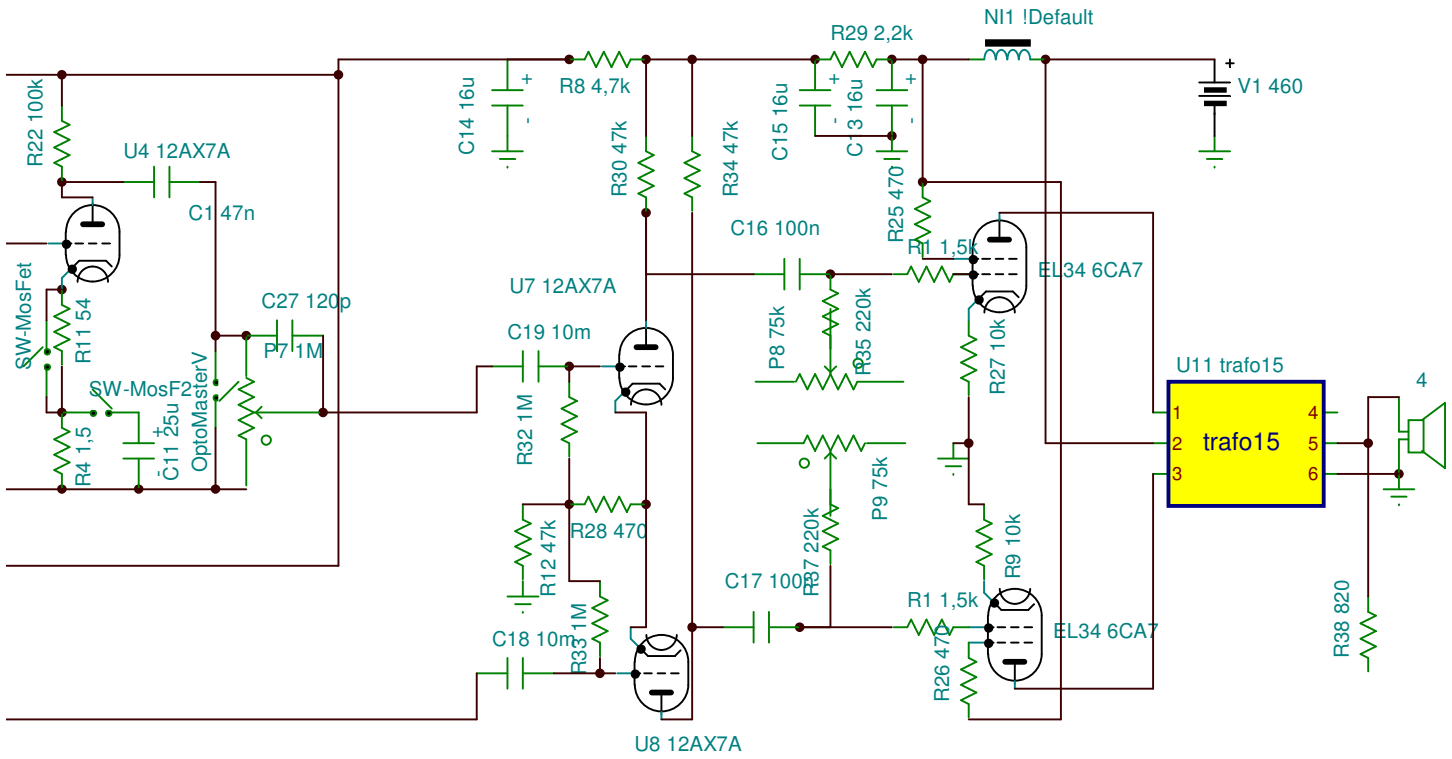
R22 100k
U4 12AX7A
C1 47n
SW-MosFet
R11 54
C27 120p
P7 1M
SW-MosF2
OptoMasterV
R4 1,5
C11 25u
C14 16u
R8 4,7k
R30 47k
R34 47k
C15 16u
C 3 16u
R29 2,2k
NI1 !Default
V1 460
R25 470
C16 100n
R1 1,5k
EL34 6CA7
U7 12AX7A
C19 10m
P8 75k
R35 220k
R27 10k
U11 trafo15
trafo15
4
R32 1M
P9 75k
R28 470
R12 47k
R37 220k
R9 10k
C17 100n
R1 1,5k
EL34 6CA7
C18 10m
R33 1M
R26 470
R38 820
U8 12AX7A